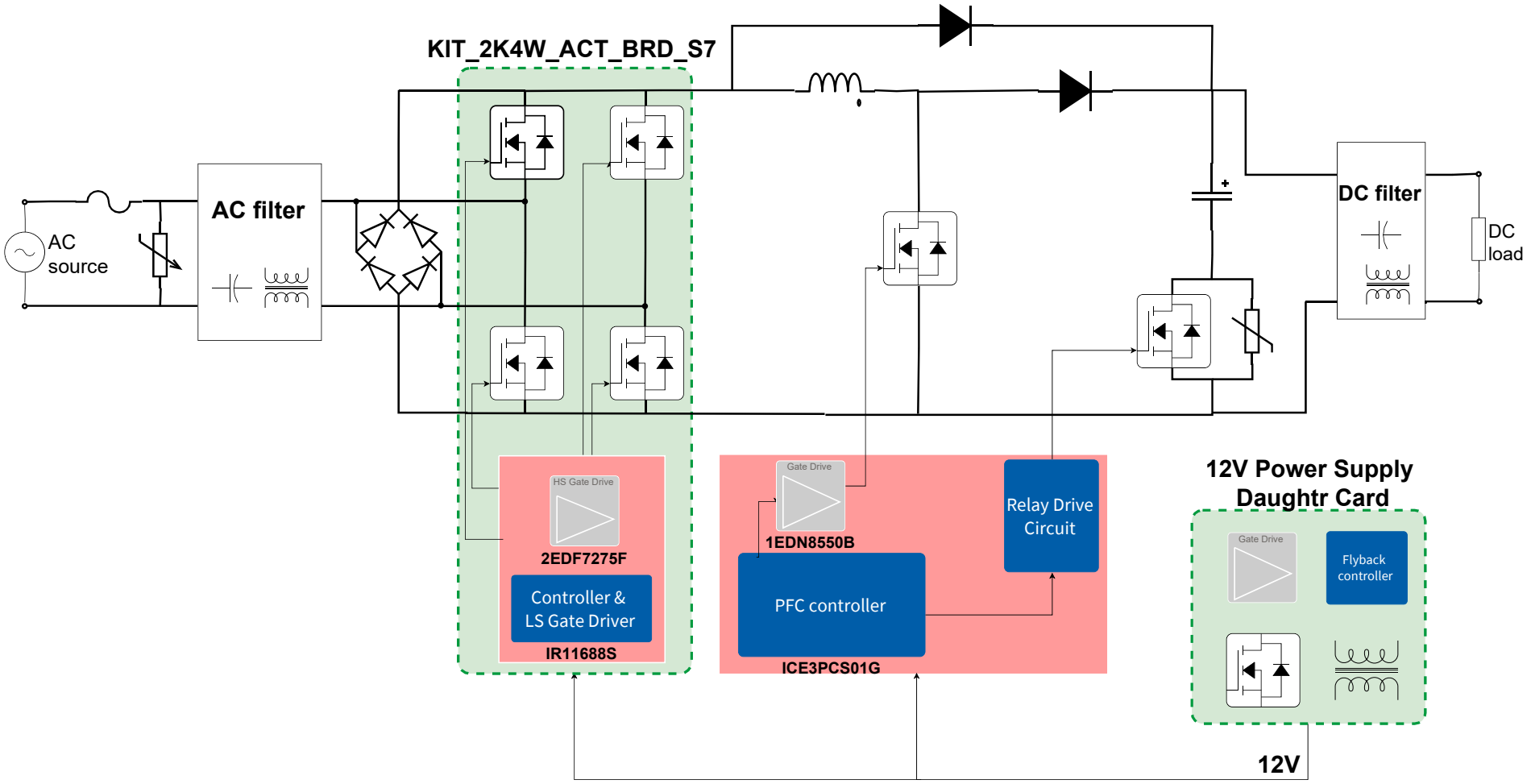
KIT_2K4W_ACT_BRD_S7
AC source
AC filter
DC filter
DC load
HS Gate Drive
2EDF7275F
Controller & LS Gate Driver
IR11688S
Gate Drive
1EDN8550B
PFC controller
ICE3PCS01G
Relay Drive Circuit
12V Power Supply Daughtr Card
Gate Drive
Flyback controller
12V